MANUAL PMH PAD-MOUNTED GEAR

OUTDOOR DISTRIBUTION (14.4 KV AND 25 KV)

CONTENTS

Introduction 1

PMH Models 4

Application 5

Construction 13

A Design to Handle All Three-Phase Live-Switching 20
- Live Switching–Opening 20
- Live Switching–Closing 20

Type SML and Fault Fiter Power Fuses 22

Blown-Fuse Indications 25

The Ultimate In Circuit-Interrupting Simplicity 26

Switching with the Uni-Rupter Interrupter 28
- Live Switching—Opening 28
- Live Switching – Closing 28

Conclusion 33

Appendix 34
- **Figure notes** 34

Introduction

The underground grid has evolved over time to support the trend of reducing overhead lines. This is because underground lines have been shown to increase reliability, have minimal operational costs, and improve worker safety.

Utilities are looking to continue this evolution by updating or expanding their present systems to meet present and future demands. PMH Pad-Mounted Gear offers several key benefits that provide outstanding value, including security, long life, reliable performance, and a wide range of solutions for different applications.

It's the complete switching and protection package that combines the ratings, configurations, components, and features to make it easy to select, easy to install, and easy to operate.

S&C Manual PMH Pad-Mounted Gear, incorporating S&C Mini-Rupter® Switches and S&C Power Fuses with Uni-Rupter® Interrupters in free-standing, self-supporting enclosures, are available in a variety of circuit configurations to allow you to tailor medium-voltage switching and protection packages to your underground distribution applications.

These PMH models, which are available in ratings of 14.4 kV and 25 kV, feature external handle-operated, 600-ampere Mini-Rupter Switches for three-pole switching of source circuits. S&C Mini-Rupter Switches are specifically designed to handle all three-phase live-switching duties, including full-load and associated transformer-magnetizing and cable-charging currents plus fault-closing operations.

Feeder circuits may be provided with Mini-Rupter Switches for 600-ampere three-pole switching or hook-stick operated S&C Power Fuses with Uni-Rupter Interrupters for 200- or 400-ampere single-pole switching plus protection.

PMH models accommodate a choice of S&C SML Power Fuses or S&C Fault Fiter® Electronic Power Fuses. Permanently accurate SML-20 and SML-4Z Power Fuses and Fault Fiter Electronic Power Fuses, available in a wide choice of ampere ratings and time-current characteristics, provide superb protection against the full spectrum of fault currents and precise coordination with all upstream and downstream protective devices. After a fault occurs, only the inexpensive refill unit or fuse unit of the power fuse, or the interrupting module of the electronic fuse, must be replaced while the fault is being located and corrected.

With S&C Pad-Mounted Gear, you get in-air visibility, in-air switching, and in-air insulation. Readily visible components give the operator the ability to visualize the circuit configuration and all of the components being operated. Open switch gaps are easily established and verified. Unlike gear with hidden switch contacts, no cumbersome procedures are required to establish working clearances. Full visibility allows easy identification of blown fuses, and there is no messy insulating oil to contend with when fuses are removed for replacement. In-air insulation eliminates the need to buy, install, monitor, or maintain any insulating medium.

A dual-purpose front barrier of fiberglass-reinforced polyester is provided for each switch and fuse. When the switch or fuse is in the Open position, this barrier can be inserted into the open gap to guard against inadvertent contact with live parts. Interphase and end barriers (where required) of the same material are provided with each switch for BIL ratings and with each set of fuses for phase segregation and to facilitate fuse handling. Additional barriers of fiberglass-reinforced polyester separate front and rear compartments and isolate the tie bus. Full-length steel barriers separate adjoining compartments. Each switch, fuse, and bus terminal is provided with a ground stud, as is each ground pad.

S&C Manual PMH Pad-Mounted Gear is available in 12 models with switches and fuses in circuit configurations to fit every requirement,

giving you complete flexibility in designing your underground system. S&C has drawn upon an inventory of basic design concepts developed through more than 60 years of designing and manufacturing pad-mounted gear to create these totally pre-engineered packages. Standardization of construction eliminates drawing preparation time and dramatically reduces drawing approval time, bringing you all the economies to be realized from repetitive manufacturing.

Manual S&C PMH Pad-Mounted Gear allows you the greatest flexibility in designing reliable and economical underground distribution systems to serve industrial, institutional, commercial, or residential applications.

Whether the application is simply switching and protecting an individual transformer or a complex scheme requiring sectionalizing and/or multiple tapping of a primary feeder to serve transformers or laterals, S&C Pad-Mounted Gear does it all.

PMH Models

FIGURE 1. S&C Pad-Mounted Gear is available in 12 pre-engineered models. Use these circuit configurations to solve your underground switching and protection problems. The system design possibilities are virtually unlimited.

See descriptions of the pre-engineered models in the Appendix at the end of this document. Figure 1 notes

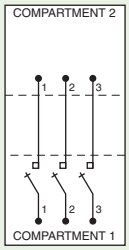

PMH-3

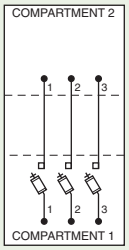

PMH-4

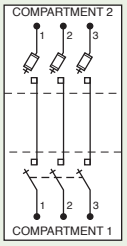

PMH-5

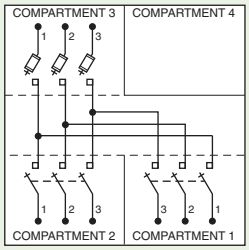

PMH-6

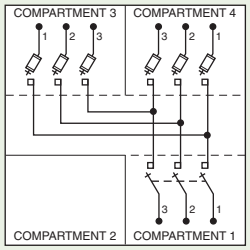

PMH-7

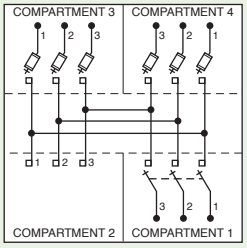

PMH-8

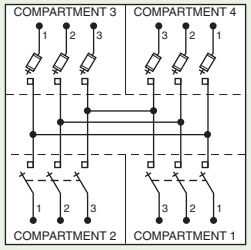

PMH-9

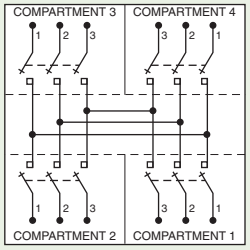

PMH-10

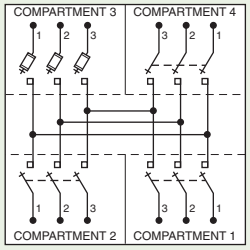

PMH-11

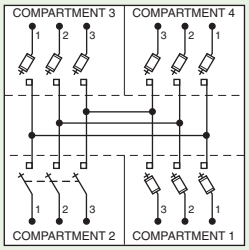

PMH-12

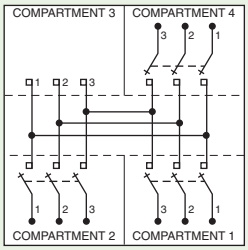

PMH-13

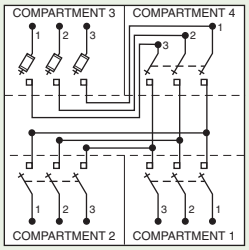

PMH-19

Three basic circuit types meet the requirements of different loads. The variety of circuit configurations available in pad-mounted gear simplifies your system design task.

Three basic circuit types—radial, primary-selective, and looped-primary— are used alone and in combination to design underground distribution systems. You can combine these three circuit types to produce a system with economics and reliability tailored to the requirements of the load.

Radial circuits, such as those shown in **Figure 2 on page 6**, provide the simplest and most economical method of delivering power to a load. However, should a fault occur on the radial source cable, power will be lost to all of the loads on that cable until the fault is located and corrected.

This type of circuit is often used on industrial, commercial, and institutional systems, where complete control over the security and growth of the system is possible. For utility systems, greater redundancy and the ability to serve loads through more than one route are often required so a high degree of service continuity can be provided in spite of the exposure to dig-ins, vandalism, and other events beyond the control of the utility.

One method used to achieve higher continuity of service is primary-selective service from two circuits, shown in **Figure 3 on page 7**. With primary-selective service, one circuit serves as the preferred source providing power to the load, while the second circuit remains available as the alternate source of supply. If the preferred source fails, switching operations may be performed to provide power to the load from the alternate source. These switching operations can be performed by manual or power-operated pad-mounted gear or metal-enclosed switchgear.

FIGURE 2. Radial circuits are often used on industrial, commercial, and institutional in-plant distribution systems. Figure 2a illustrates a Model PMH-5 used to switch and protect a single load, and Figure 2b diagrams a Model PMH-7 serving two loads. By using multiple radial circuits and segmenting the loads, only the load or loads associated with a given process must shutdown if a fault occurs. Other radial circuits remain unaffected. The low cost of pad-mounted gear is the key to the design of an extensive system with a high degree of segmentation.

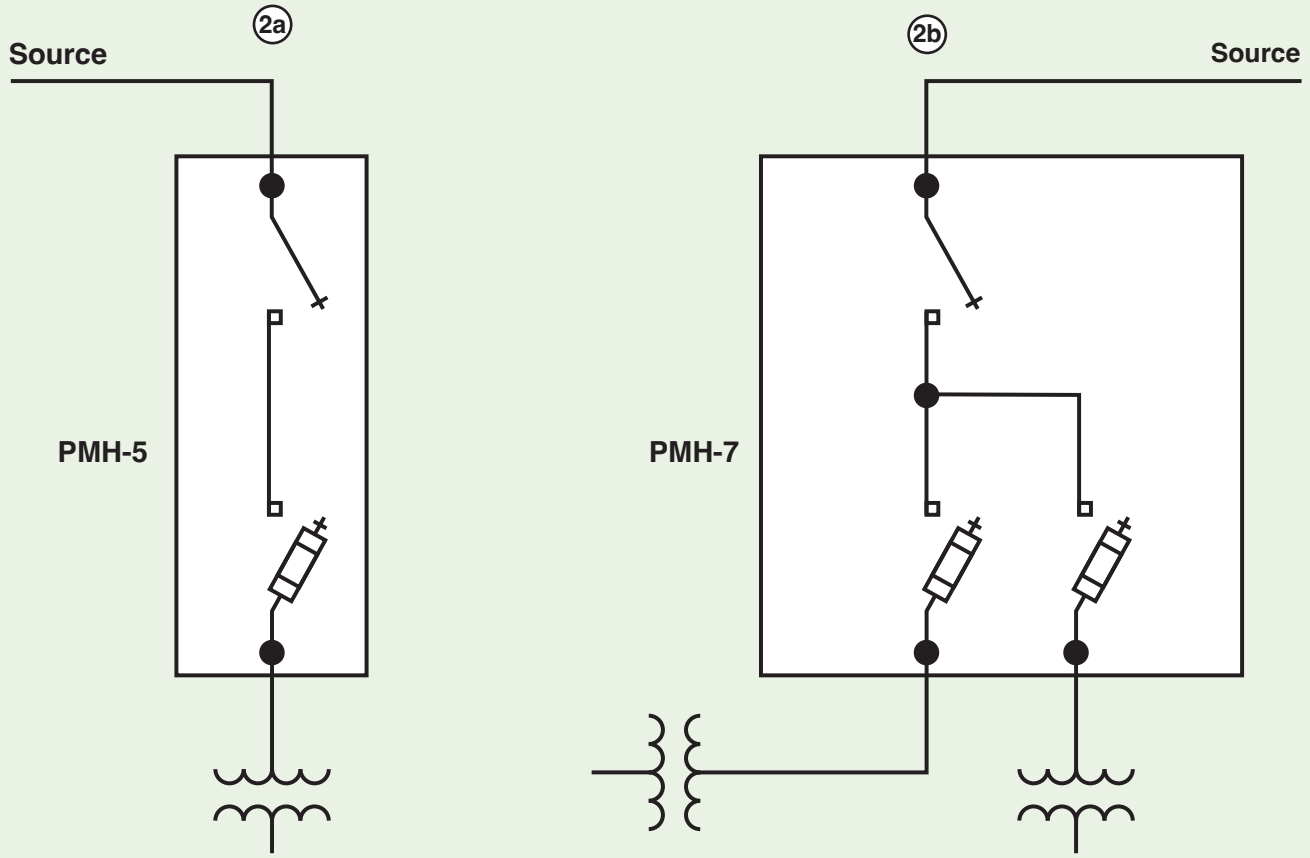

FIGURE 3. A Model PMH-9 is used to provide primary-selective service from two utility sources.

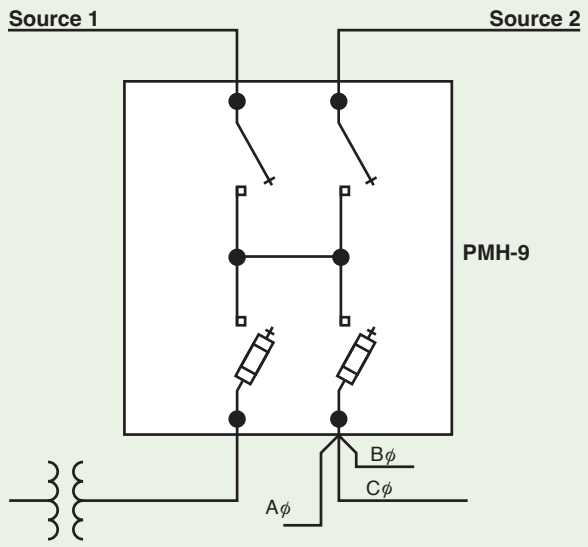

Figure 3 shows a Model PMH-9 being used to switch and protect one three-phase transformer and three single-phase loads. These loads can be selectively served from either of the two sources.

The looped-primary circuit is another way to provide a higher level of service continuity. This type of circuit does not reduce the frequency of interruptions compared to a radial circuit, but it does permit quick restoration of service to all loads following a fault on the looped-primary feeder cable. A looped-primary circuit is served from either one or two sources and has one normally open sectionalizing point near the center of the loop so interruptions caused by cable failures will be restricted to half of the loop. Additional sectionalizing points are provided within the loop to allow power to be supplied to each load from either end of the loop. In the event of a failure within the loop, switching can be performed to isolate the failed section and provide power to all of the loads in the loop.

Figure 4 illustrates two simple looped-primary circuits, each consisting of two Model PMH-9s and one Model PMH-6 used to switch and protect various loads. The looped-primary circuit noted as 4a in **Figure 4** is served by a single source, and the looped-primary circuit noted as 4b is served by two different utility substations. In both circuits, one of the interrupter switches in the middle of the loop is open under normal conditions, so the loads connected to either section of the cable are served from opposite ends of the loop. Should a fault occur on a section of the looped-primary feeder cable, the upstream protective device on the source serving that portion of the loop will operate to clear the fault. Selective manual switching operations can then be performed to isolate the faulted section of cable and restore power to all loads.

FIGURE 4. Two looped-primary systems using PMH models in 600-ampere loops.

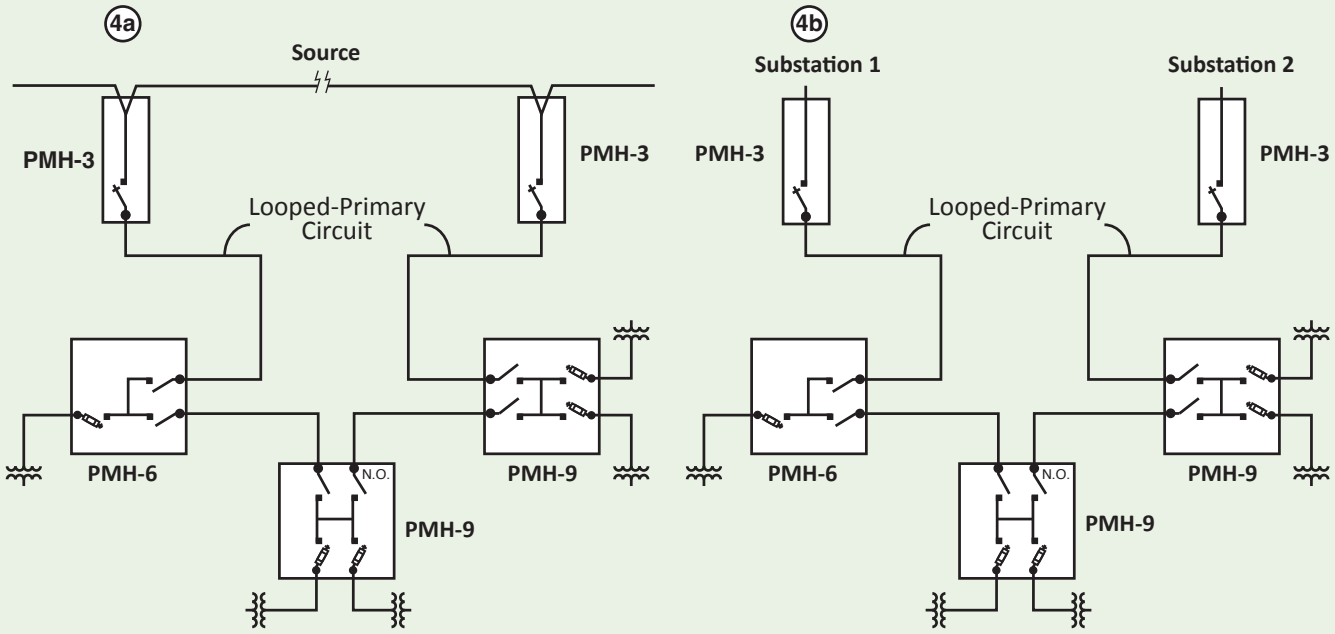

In serving campus-type industrial, commercial, and institutional installations (such as universities, shopping centers, and industrial parks), pad-mounted gear can be used in conjunction with metal-enclosed switchgear to provide a high degree of service continuity. In **Figure 5 on page 10**, metal-enclosed switchgear is being applied as an automated primary-selective service-entrance switching center. Here, the common-bus primary-selective system is used, so all loads on the system are supplied by one utility source with an alternate source available if the preferred source fails. In the event preferred-source voltage is lost, automatic switching operations will occur to provide power to the loads from the alternate source. Distribution of power to some of the loads within the system is accomplished using pad-mounted gear on a looped-primary feeder circuit connected to two feeder bays of the metal-enclosed switchgear.

Serving dispersed loads with looped-primary circuits complements the service continuity provided by the primary-selective system and provides operating flexibility. See **Figure 6 on page 11**. Two other transformer loads are served by Model PMH-5s on a radial circuit from one feeder bay. Fusing of each transformer individually in this way enhances protection by allowing use of smaller fuse ampere ratings.

The basic circuit types described above can be combined into a complex system, as shown in **Figure 7 on page 12**. Even this complex system can be implemented with standard units of S&C Pad-Mounted Gear, illustrating the flexibility in system design afforded by the broad variety of models available.

FIGURE 5. A simple distribution system using pad-mounted gear for sectionalizing within a loop and on two radial circuits, with metal-enclosed switchgear applied as a service-entrance switching center and for switching and protecting the ends of the looped-primary circuit. If the pad-mounted gear belongs to a non-utility user, key interlocks are supplied to comply with the National Electrical Code. Should a fault occur on the load side of such gear, switching must be performed to de-energize the fuses before access can be gained to the fuses. This means both loads on a Model PMH-9 must be de-energized when a fault occurs on either one. If this is unacceptable, Model PMH-6s may be used, but switches in the loop must still be opened before gaining access to the fuses. Model PMH-19s which incorporate a tap switch in series with the fuses, allow access to the fuses without opening the loop.

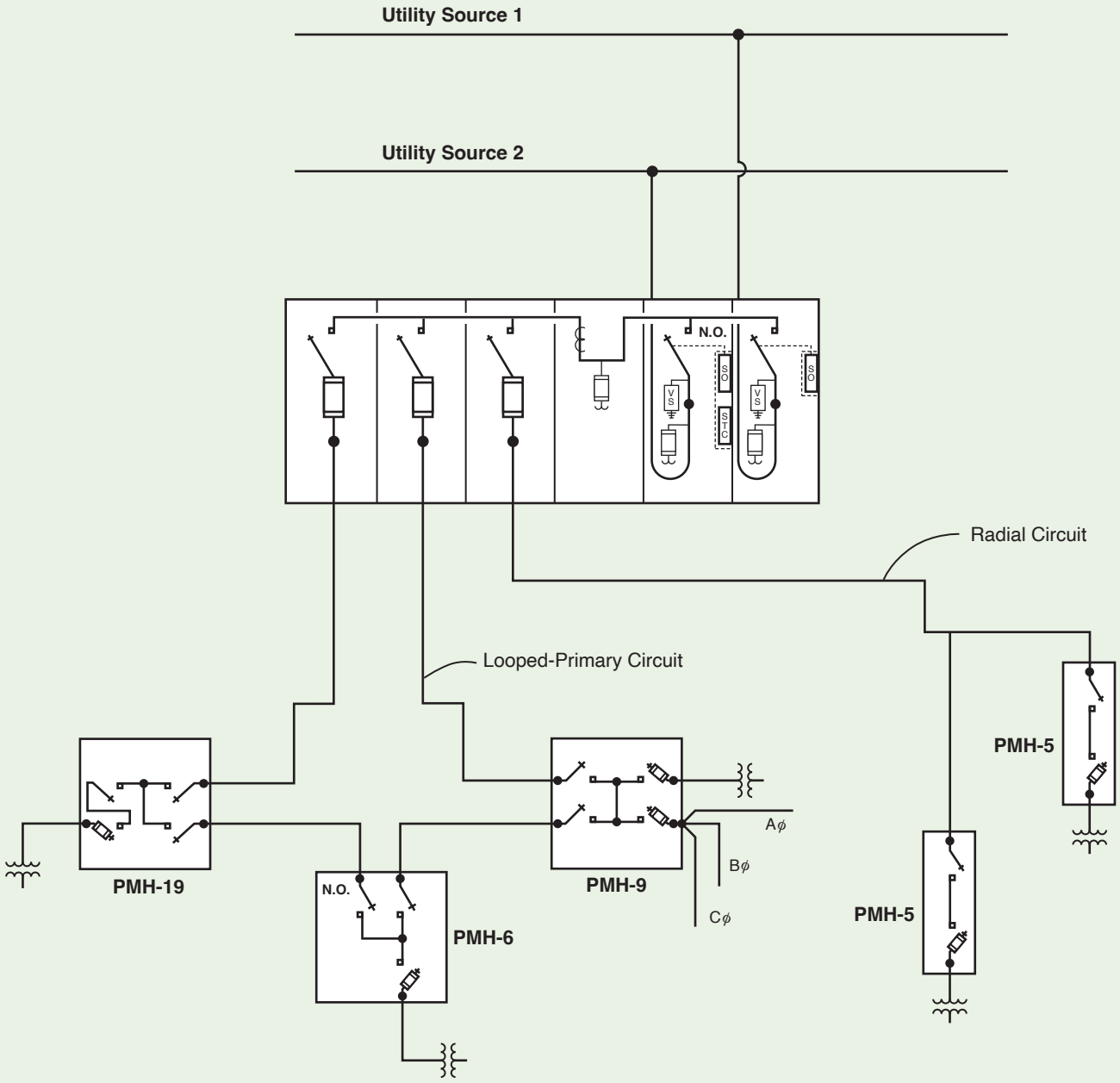

The widely dispersed segmented blocks of load are served by a major loop and a number of subloops. The PMH models illustrated in the major loop are all served by a single looped-primary circuit connected to two utility sources. Should a fault occur on the main looped-primary cable, manual switching operations can be performed to restore service to the loads, as previously described on **page 5** for a simple loop system.

As shown in illustration 7a in **Figure 7 on page 12**, both ends of the multiple single-phase subloops serving the small loads of a residential area are connected to a Model PMH-9. In a similar manner, the Model PMH-9 shown in illustration 7b serves both ends of a three-phase subloop serving several three-phase loads. Configuration 7c diagrams a three-phase subloop consisting of Model PMH-9 units connected to a Model PMH-6 on one side of the main looped-primary circuit and to a Model PMH-9 on the other side. The Model PMH-9 also serves an isolated three-phase load.

By connecting the subloop across the main loop in this way, the loads on the subloop may be served from either utility source as circumstances dictate. Illustration 7d is similar to 7b, except the ends of the subloop are connected to different PMH units instead of the same one. This situation may occur when the subloops cover a very large area, making the cable runs necessary to return the subloop to the original pad-mounted gear excessively long.

The Model PMH-11 shown in illustration 7e serves one isolated three-phase load and supplies a tie to another system. In illustration 7f, a three-phase subloop consisting of two Model PMH-9s and one Model PMH-6 is diagrammed. This last subloop serves a medium-sized commercial park where three-phase power requiring three-phase switching is delivered to several large loads.

FIGURE 6. This large suburban shopping mall is served by seven units of pad-mounted gear in two looped-primary circuits. Two lineups of metal-enclosed switchgear are applied at primary-selective service-entrance switching centers to switch the ends of the loops.

FIGURE 7. To serve many loads of different types dispersed over a wide area, simple circuit arrangements are often combined into a complex distribution system. Illustrated here are different ways to use looped-primary systems to serve various types of load.

See descriptions of the looped circuits in the Appendix at the end of this document. Figure 7 notes

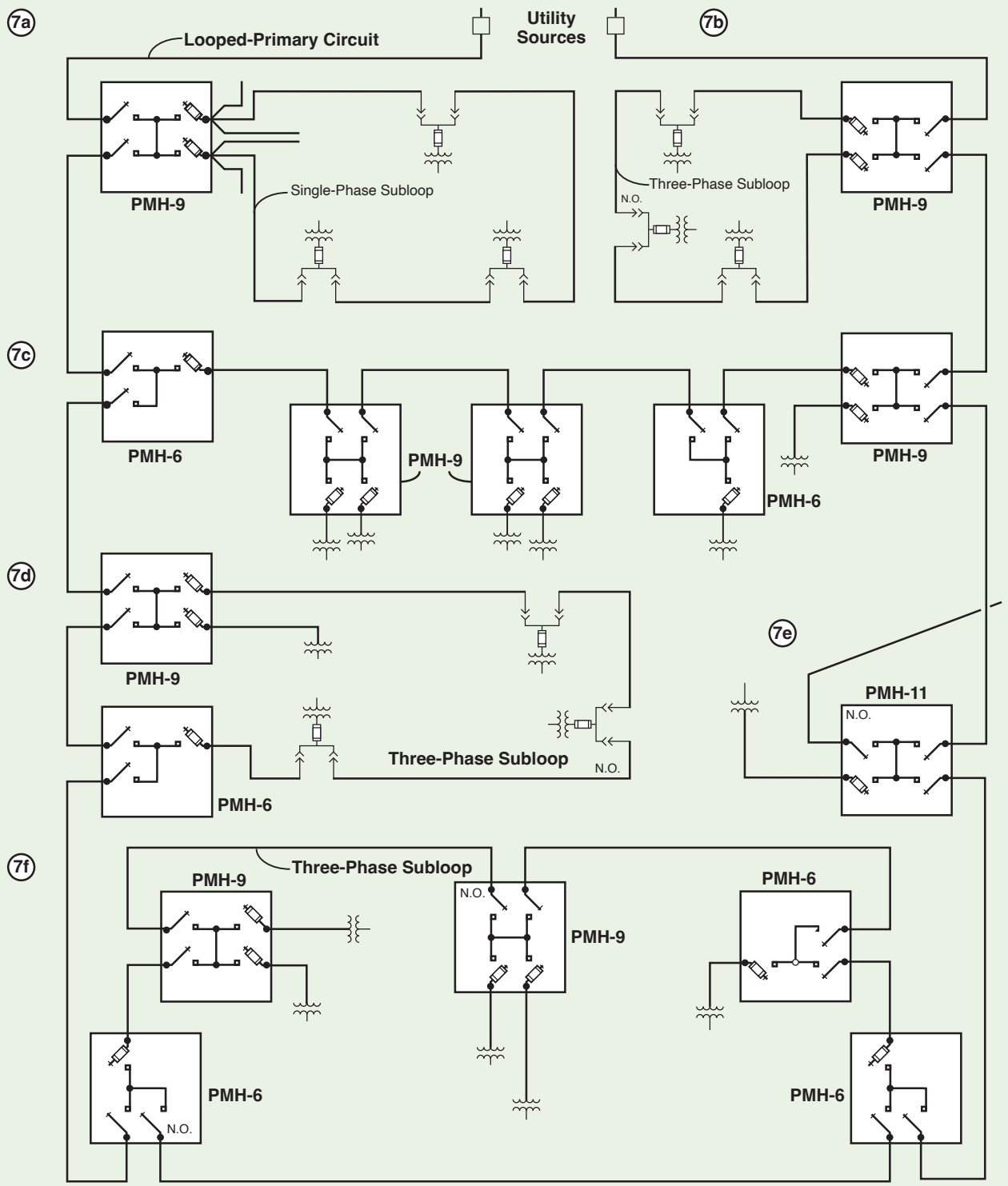

S&C Pad-Mounted Gear incorporates many provisions to minimize hazards to qualified persons and to the general public. The free-standing, self-supporting enclosure is constructed of heavy (11-gauge) steel sheet metal. All structural joints are welded; there are no externally bolted side sheets or rear sheets to invite removal. See **Figure 8** and **Figure 9 on page 15**

Access to medium voltage is controlled by the S&C Penta-Latch® Mechanism, which latches automatically when the door is closed and can be unlatched only with a pentahead socket wrench or tool. The latching mechanism is fully coordinated with the provision for padlocking; a padlock can be installed only after the door is securely closed and completely latched, and the mechanism can be unlatched only after the padlock has been removed.

FIGURE 8. Fuse-side view of a Model PMH-9 with SML-20 Power Fuses in the right-hand compartment and Fault Fiter® Electronic Power Fuses in the left-hand compartment. (This nonstandard combination of fuses is shown for comparison only.)

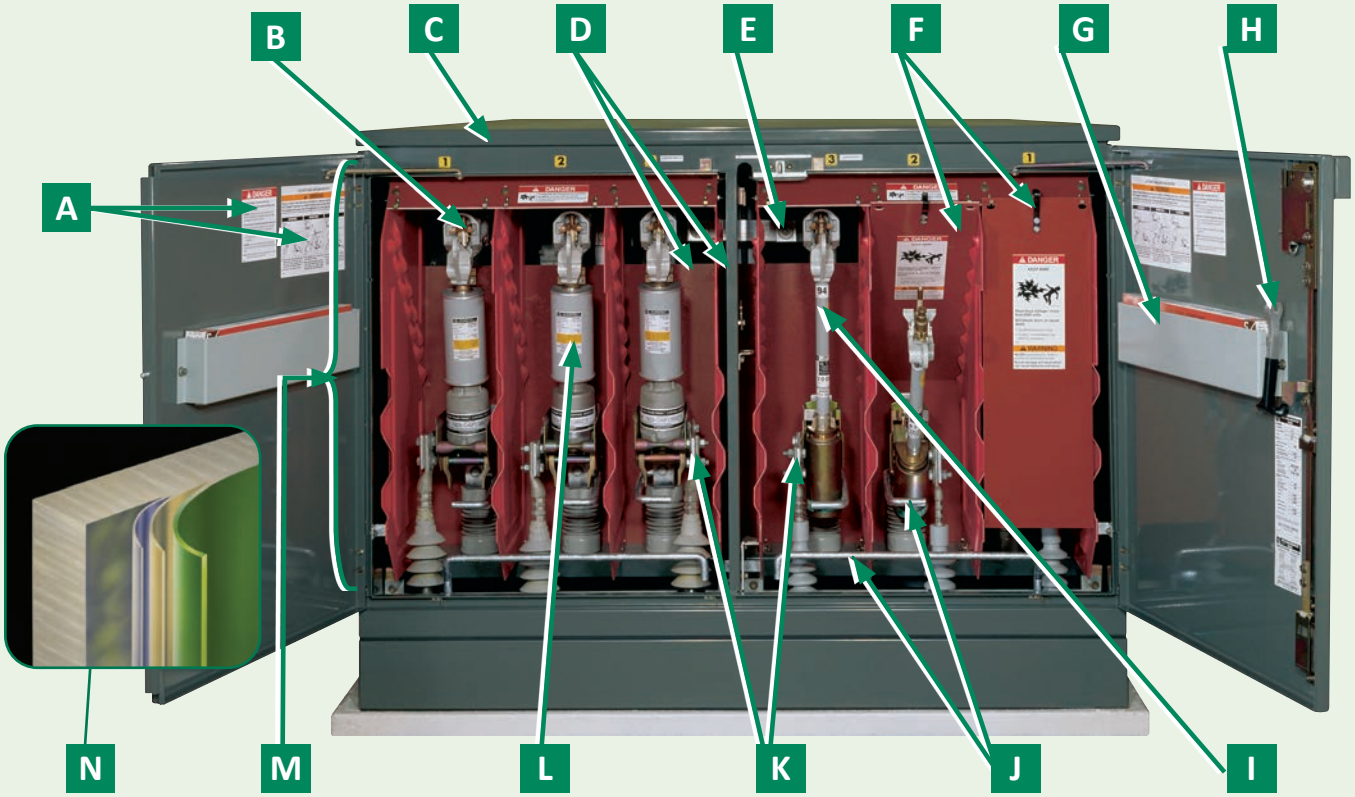

Construction (continued)

A Cautionary signs are unmistakably bold and clear.

B S&C Uni-Rupter® Interrupter.

C Insulated roof: A “no-drip” compound on the underside of the roof guards against formation of condensation that could drip onto the energized parts.

D Segregated circuits: Full-length steel barriers separate side-by-side compartments; fiberglass-reinforced polyester barriers separate front compartments from rear compartments and isolate the tie bus.

E Main bus—600 amperes continuous.

F Dual-purpose front barriers of GPO-3-grade fiberglass-reinforced polyester for all fuses and switches guard against inadvertent contact with live parts when in the normal vertical position. Inserted into the open gap of a fuse or switch, barriers provide isolation from bus and upper contacts.

G Storage racks on each fuse compartment door hold up to six SM-4® Refill Units or three SMU-20® Fuse Units per rack lets you restore service quickly.

H Grappler™ Handling Tool: The S&C fuse-handling fitting is provided with each model equipped with fuses.

I SML-20 Power Fuse with Uni-Rupter Interrupter.

J Ground studs for fuse terminals, switch terminals, and the ground pad in each compartment.

K Terminals accept a wide variety of field-assembled cable-terminating devices.

L Fault Fiter® Electronic Power Fuse with Uni-Rupter Interrupter.

M Corrosion-resistant non-ferrous door hinges and hinge pins.

N S&C’s Ultradur® II Outdoor Finish provides a tough, multistage, baked-on finish with exceptional performance proved by a rigorous battery of industry tests.

FIGURE 9. Switch-side view of a Model PMH-9.

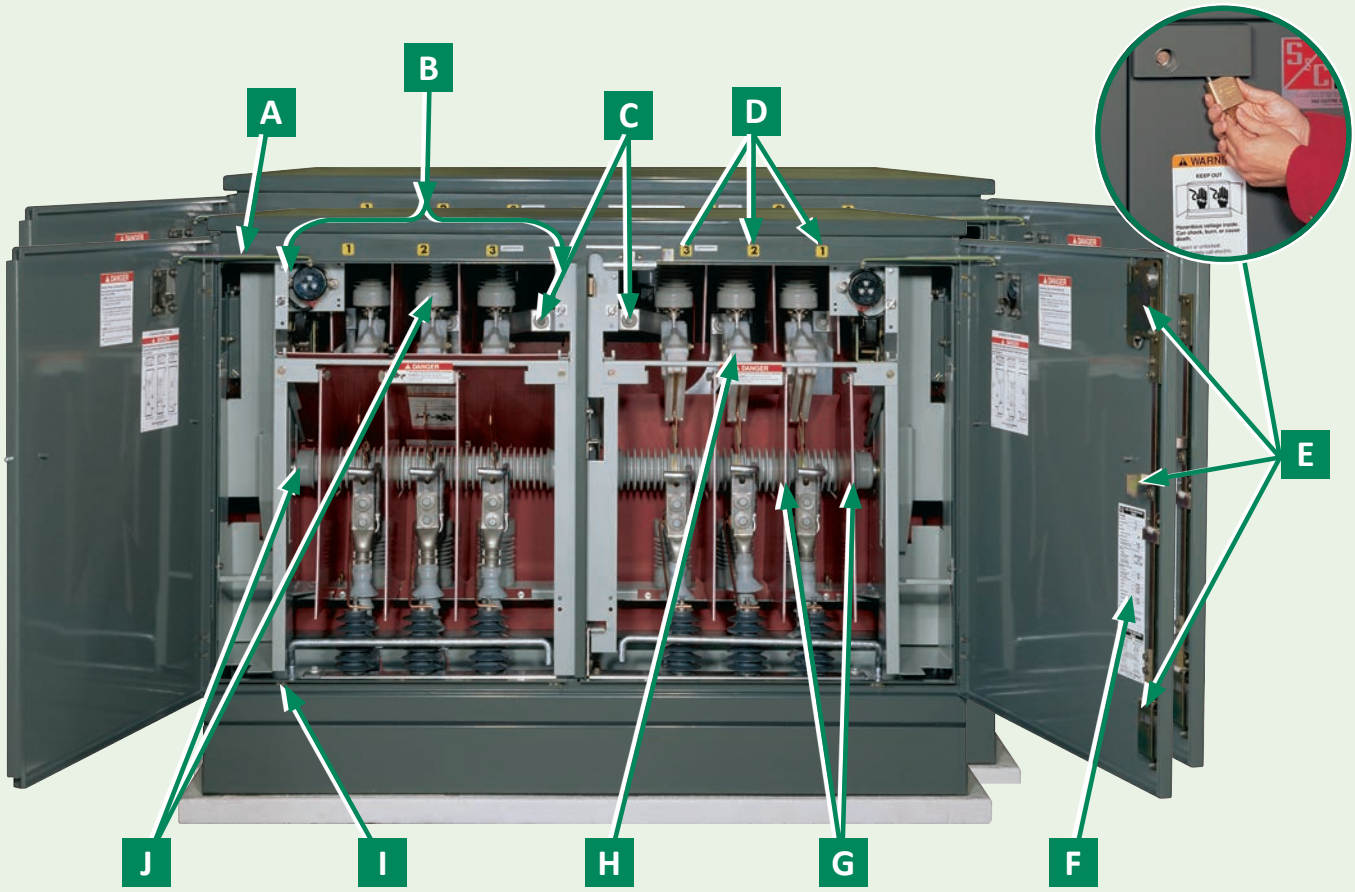

Construction (continued)

A Door holders store above the door openings, in full view with the doors open, behind the doors when closed.

B Viewing window for visible verification of the switch position is easily removed for phasing.

C Aluminum bus connections are wire-brushed and protected by an oxide-inhibiting abrasive compound and are bolted at a uniform torque of 50 ft-lb; two Belleville washers per bolt maintain contact pressure.

D Compartment-identification and phase-identification labels.

E Penta-Latch® Mechanism provides vandal-resistant three-point door latching for S&C Pad-Mounted Gear. Closing the door releases the charged Penta-Latch Mechanism, automatically latching the door and securing the pentahead actuator—only after the actuator is secured can a padlock be installed. Protective hood shields padlock shackle.

F Circuit diagram provides instant view of circuit configuration and takes the mystery out of switching operations. The label also gives complete switch and fuse ratings.

G Interphase and end barriers for all switches and fuses of fiberglass-reinforced polyester for superior arc and track resistance-provide phase segregation, help achieve BIL ratings and aid in fuse handling.

H S&C Mini-Rupter® Switch is furnished with operating handle for easy operation. See **Figure 11 on page 21**. The handle folds for storage behind the switch-operating-hub cover.

I Ground pads, on the inside at the bottom door stile in each compartment, accommodate connectors for attachment of cable concentric-neutral ground leads and ground studs.

J Cypoxy™ Insulators, S&C's cycloaliphatic epoxy resin system, insulates all live parts from ground.

The Mini-Rupter Switch, a field-tested and proven, external handle-operated, three-pole, group-operated interrupter switch, is featured in 14.4-kV and 25-kV PMH models of S&C Pad-Mounted Gear. Swift, positive closing and opening of the switch independent of the speed at which the operating shaft is turned is ensured by the quick-make quick-break mechanism.

The mechanism's operating shaft is equipped with a ¾-inch hex hub, accommodating the folding switch-operating handle, a ¾-inch deep-socket wrench, or a shallow-socket wrench with an extension. The handle may be positioned on the hub to provide the operator the most convenient arc of handle rotation. And regardless of the position selected, there is no interference with the switch-operating-hub access cover.

Positive stops at the switch-operating hub protect the quick-make quick-break mechanism by preventing the operator from turning it in the wrong direction. Switch position is shown by OPEN and CLOSE indicators at the operating hub.

FIGURE 10. A 600-ampere, 14.4-kV Mini-Rupter Switch shown with barriers removed for clarity.

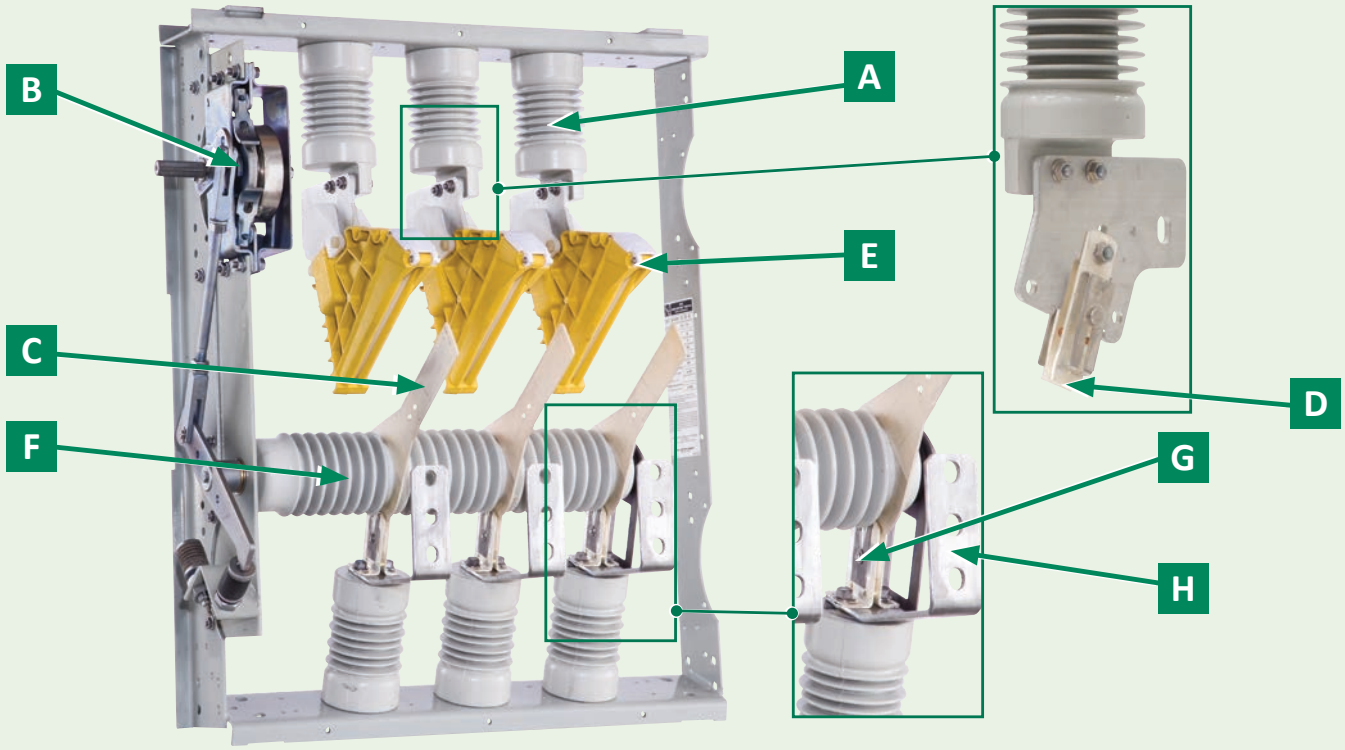

A Cypoxy Insulators provide generous leakage distances and are nontracking and self-scouring.

B Quick-make quick-break mechanism requires no adjustments. It closes or opens the Mini-Rupter Switch swiftly and positively, independent of speed of handle operation, and locks the blades in both the Open and Closed positions. Its positive action contributes to the Mini-Rupter Switch's ability to achieve fast circuit interruption and two-time duty-cycle fault-closing ratings.

C A multipurpose, one-piece, formed hard-drawn copper blade, featuring silver-clad contact surfaces on both sides, is used for circuit-closing, continuous-current carrying, and circuit-interrupting. Its simple, reliable, high-speed action is unlike the uncertain action of auxiliary interrupting-blade-and-contact mechanisms which are dependent upon retention of correct sequencing with the main blade and contact and upon spring assistance to snap the interrupting blade open.

D Multifinger, convex, silver-clad copper jaw contacts are independently sprung and backed up with flat stainless steel springs to provide equalized, four-point pressure on the blade's silver-clad contact surfaces.

E An arc compressor provides controlled circuit interruption without an external arc or flame, or the need for separate—and unreliable—auxiliary blades. A unique lip-seal wipes the blade as the blade exits the arc compressor. This keeps the arc under compression and directs controlled arc gases through deionizing suppressor vent.

F Cypoxy Insulators are used as an assembly medium to produce a unified insulated shaft with blade supports and journals permanently molded in place. The shaft thus positions blades in "fixtured" alignment. There are no clamp-on crank-and-connecting-link assemblies to portend alignment or simultaneity problems.

G Pure-silver buttons cold-headed into four independently sprung contact fingers, with equalized pressure applied by flat stainless steel loading springs, ensure efficient current transfer at the silver-clad blade-support contact.

H Strain-guard terminal protects the Mini-Rupter Switch against damage from excessive cable or foundation movement and the unique design limits strain on switch contact. The contact support holds the stationary contact in proper alignment independent of the terminal pad, allowing the terminal pad to flex as necessary to isolate the contacts from cable or foundation movement.

A Design to Handle All Three-Phase Live-Switching

S&C Mini-Rupter Switches feature full-load switching with no external arc or flame. They afford maximum operating flexibility because of their exceptional fault-closing ability, expressed in terms of two-time duty-cycle fault-closing ratings. The fault-closing ratings are the available fault currents into which the switches can be closed twice, remaining operable and able to carry and interrupt rated currents.

This ability permits quick restoration of service following a fault-closing operation without the need for an extended outage for replacement of switch parts or for temporary restoration of service through an alternate switch until replacement parts can be obtained. It also permits use of S&C Pad-Mounted Gear to sectionalize looped-primary systems, where switches are opened and then closed to locate the fault and are subsequently opened to isolate the fault. The ability to open following a fault-closing operation is crucial to any sectionalizing scheme.

S&C's Mini-Rupter Switches, with their duty-cycle fault-closing ratings, are superior to ordinary switches with simple "fault-closing" or "make-and-latch" ratings that, following an initial fault-closing operation, offer no assurance of an ability to subsequently carry or interrupt rated current, much less any expectation of tolerating a second fault closing. Switches without duty-cycle fault-closing ratings invalidate primary-selective (source-transfer) or sectionalizing schemes. S&C Mini-Rupter Switches are suitable for these live-switching duties in three-phase circuits:

LIVE SWITCHING—OPENING

- **Transformer switching**—Transformer load currents up through 200 or 600 amperes at 14.4 kV and 400 amperes at 25 kV, as well as transformer magnetizing currents associated with the applicable loads
- **Line switching**—Load splitting (parallel or loop switching) up through 200 or 600 amperes at 14.4 kV and 600 amperes at 25 kV, as well as load dropping of currents up through 200 or 600 amperes at 14.4 kV and 400 amperes at 25 kV; also line dropping (charging currents typical for distribution systems of these voltage ratings)
- **Cable switching**—Load splitting (parallel or loop switching) up through 200 or 600 amperes at 14.4 kV and 600 amperes at 25 kV, as well as load dropping of currents up through 200 or 600 amperes at 14.4 kV and 400 amperes at 25 kV; also cable dropping (charging currents typical for distribution systems of these voltage ratings)

LIVE SWITCHING—CLOSING

- **Circuit-closing**—Inrush currents associated with the above opening duties
- **Two-time duty-cycle fault closing**—Ratings equal or exceed the short-circuit rating of the gear—22,400 amperes RMS asymmetrical at 14.4 kV; 20,000 amperes RMS asymmetrical at 25 kV

FIGURE 11. A folding switch operator handle, secured inside the switch-operating-hub pocket, is provided for each Mini-Rupter Switch.

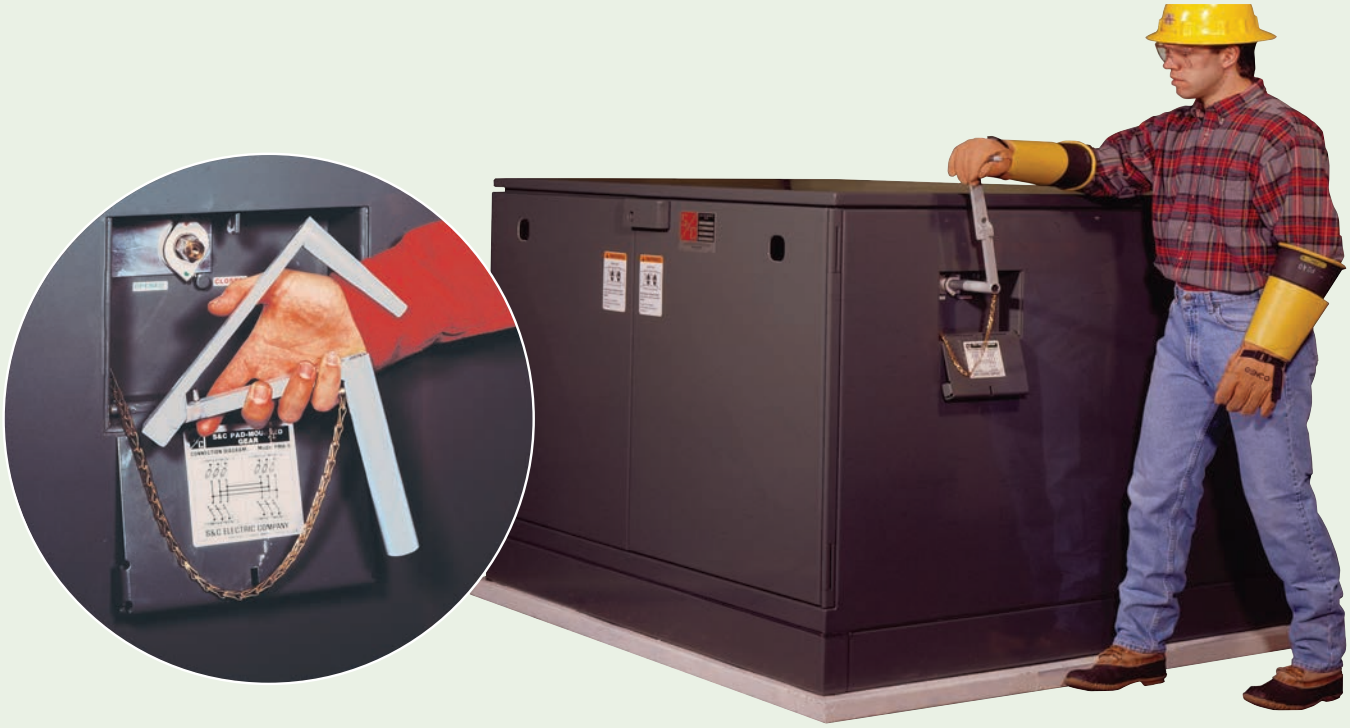

Type SML and Fault Fiter Power Fuses

S&C's Pad Mounted-Gear offers a choice of S&C Fuses: Type SML Power Fuses or Fault Fiter Electronic Power Fuses. S&C Type SML-20 and SML-4Z Power Fuses possess the performance characteristics and quality that make them especially suitable for fault protection on 14.4-kV through 25-kV distribution systems. The fuses are available in a wide variety of ampere ratings and time-current characteristic (TCC) curves, permitting close fusing to achieve maximum protection and optimum coordination. S&C SML Power Fuses have silver or pretensioned nickel-chrome elements that are drawn through precision dies to very accurate diameters and of solderless construction, brazed into their terminals.

Their TCC curves are precise, with only 10% total tolerance in melting current, compared to the 20% tolerance of many fuses (20% and 40% respectively, in terms of time). And their design and construction features conform to their TCC curves not only initially but on a sustained basis. Neither age, corrosion, nor vibration, or surges that heat the element nearly to the severing point will affect the characteristics of S&C SML Power Fuses. They are nondamageable, with these advantages:

- **Superior transformer protection.** SML Power Fuses make it possible to fuse-close to the transformer full-load current, thus providing protection against a broad range of secondary faults.
- **Higher levels of service continuity.** "Sneakouts" (unnecessary fuse operations) are eliminated.
- **Close coordination with other overcurrent protective devices.** This is attainable because of the initial and sustained accuracy of the fusible elements and because no "safety zones" or "setback allowances" must be applied to the published TCC to protect the element against damage.
- **Operating economies.** There's no need to replace unblown companion fuses on suspicion of damage following a fuse operation. Maintenance is not required to perpetuate the ratings.

FIGURE 12. Uni-Rupter® Interrupter. SML-20 Power Fuse (left), SML-4Z Power Fuse(middle), and Fault Fiter®Electronic Power Fuse (right).

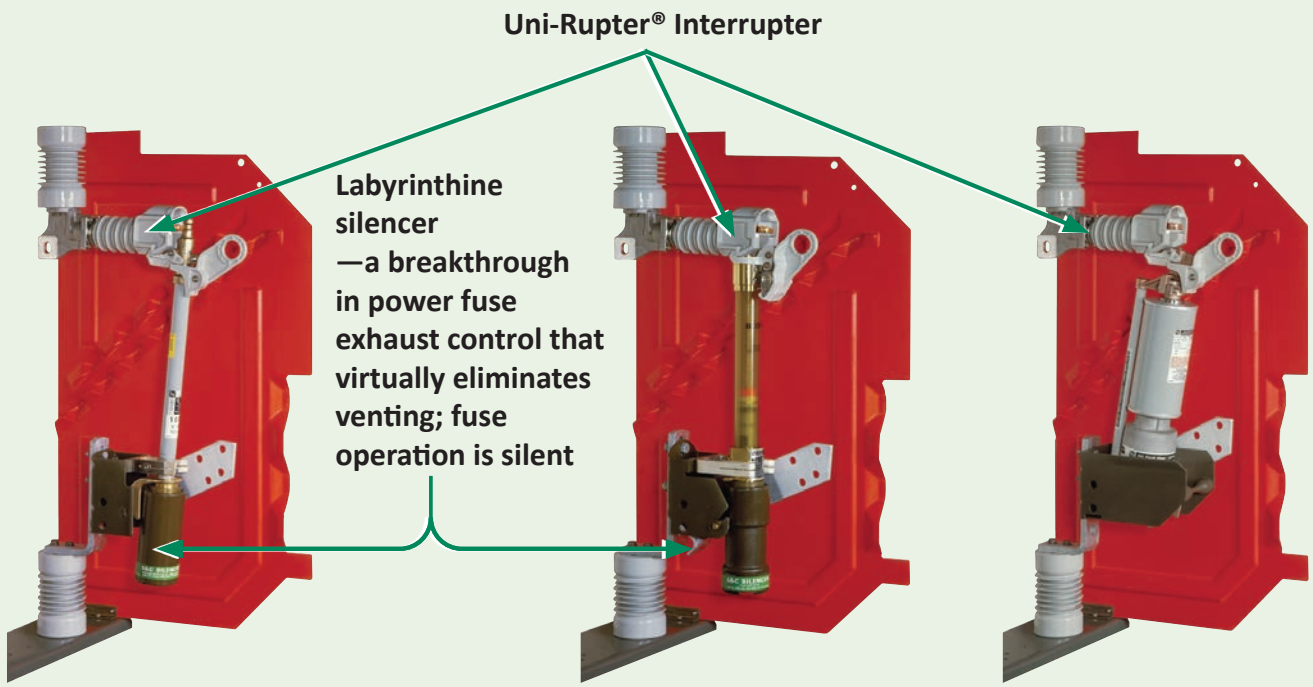

SML-20 Power Fuses feature the SMU-20® Fuse Unit, designed for universal use on both underground and overhead distribution systems. SMU-20 Fuse Units may be used in SML-20 and SME-20 Indoor Distribution Mountings as well as in SMD-20 Outdoor Distribution Mountings. They are rated 200E or 200K amperes max continuous; 22,400 amperes RMS asymmetrical (14,000 amperes RMS symmetrical) interrupting at 14.4 kV; 20,000 amperes RMS asymmetrical (12,500 amperes RMS symmetrical) interrupting at 25 kV.

SML-4Z Power Fuses are rated 200E amperes max continuous; 20,000 amperes RMS asymmetrical (12,500 amperes RMS symmetrical) interrupting at both 14.4 and 25 kV. They use S&C's reliable SM-4® Refill Unit.

Fault Fiter Electronic Power Fuses combine an innovative high-technology electronic control module with a unique interrupting module to solve difficult protection and coordination applications. The control module incorporates a current transformer and electronic circuitry to provide current sensing and the TCC of the fuse, as well as the energy to initiate the interrupting process. By using electronics, Fault Fiter fuses offer an unprecedented variety of unique TCCs that provide superior protection and precise coordination.

The interrupting module carries load current and also interrupts the current in response to a signal from the control module. A silver-plated copper main current section within the interrupting module carries the load current under normal operating conditions. Electrically in parallel with the main current section is the current-interrupting section consisting of helically wound copper-ribbon fusible elements embedded in sand.

Because the fusible elements do not carry current continuously and do not determine the TCC of the fuse, the Fault Fiter fuse is not susceptible to the protection vagaries of traditional current-limiting fuses where the elements are subjected to load cycling or repeated current surges that can alter the TCC. In addition, because the function of the fusible elements is limited to fault interruption, their design is optimized to provide maximum interrupting performance without producing voltage surges that could damage surge arresters, transformers,or other equipment.

Fault Fiter Electronic Power Fuses with Uni-Rupter Interrupters are rated 400 amperes max continuous and 22,400 amperes RMS asymmetrical (14,000 amperes RMS symmetrical) interrupting at 14.4 kV; 200 amperes max continuous and 20,000 amperes RMS asymmetrical (12,500 amperes RMS symmetrical) interrupting at 25 kV.

FIGURE 13. Blown-fuse indication is included in all fuses offered with S&C Pad-Mounted Gear.

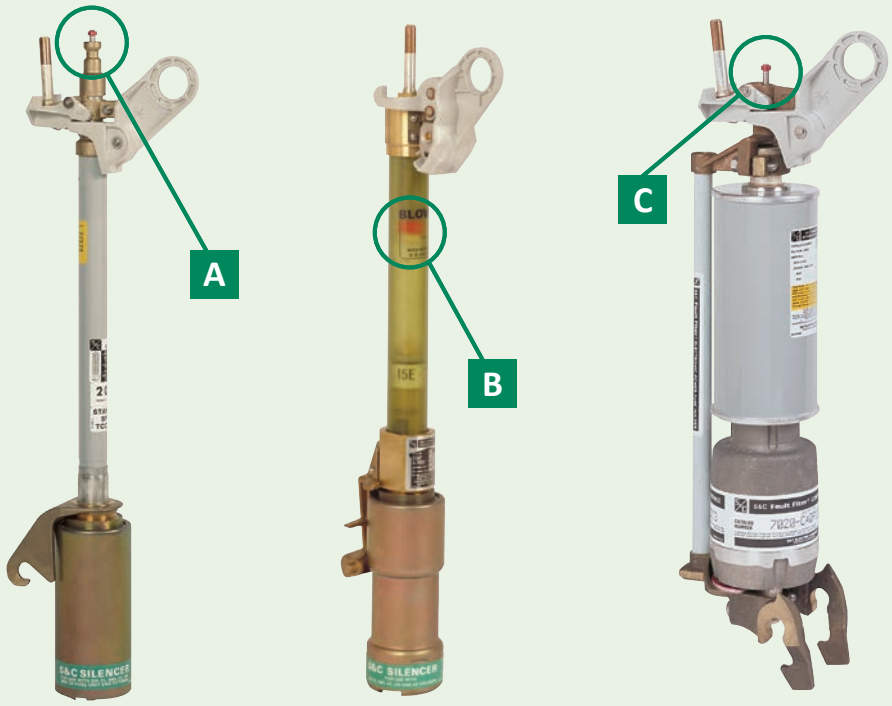

A **SML-20 Power Fuse**—A lustrous red blown-fuse target projects from the top of the SML-20 Power Fuse upper end fitting when the fuse unit has operated, and it automatically resets within end fitting when blown fuse unit is replaced. Fuse condition is easily checked with the fuse in the closed position.

B **SML-4Z Power Fuse**—A fluorescent fire-red target in a translucent SML-4Z holder moves to the BLOWN indicator window when the fuse operates, permitting a positive visual check of the fuse condition without removing the fuse from the mounting. The target fluoresces at night when illuminated with a flashlight.

C **Fault Fiter Electronic Power Fuse**—A brilliant blaze-orange blown-fuse target is highly visible at the top of the interrupting module after the electronic fuse has operated. The target's bright color is visible by daylight or flashlight.

The Ultimate In Circuit-Interrupting Simplicity

S&C Pad-Mounted Gear features 200- or 400-ampere hookstick-operated S&C Power Fuses with the Uni-Rupter Interrupter for single-pole live switching of single-phase or three phase circuits. See **Figure 12 on page 23**.

S&C's Uni-Rupter Interrupter provides single-pole across-the-board live switching of transformers, lines, and cables through 400 amperes. See **"Live switching with Uni-Rupter Interrupter."**. A firm, vigorous opening pull on the fuse with a hookstick provides direct-drive quick-break action of the Uni-Rupter Interrupter's internal moving contact through the arc-extinguishing chamber. See **Figure 15 on page 27**. Circuit interruption is accomplished by the deionizing gases generated by the thermal reaction of the arc on S&C's uniquely formulated chamber liner and moving-contact trailer; there is no external arc or flame.

At the end of the moving-contact opening stroke, after the arc has been extinguished, the external current-carrying contacts part. Then, the Uni-Rupter Interrupter automatically self-resets for the next opening operation. Switching is easily accomplished without the strained twist-and-pull effort often associated with elbows and without complex gas-assisted or force-multiplying gadgets. The required operating force does not increase with time, and there are no unwieldy cables to wrestle or components to park.

The Grappler™ Handling Tool[1] takes the work out of fuse handling by providing the sure grip, perfect balance, and ready control the operator appreciates when removing or replacing fuses. See **Figure 15** and **Figure 16 on page 27**. And its cushion-grip coat prongs make it an ideal fuse closing tool.

Circuit-closing is easy, too. A swift nonhesitating stroke with a hookstick is all that's required. See **Figure 16 on page 27**. The Uni-Rupter Interrupter's fault-closing contacts and the fuse hinge provide an express, self-guiding action for the fuse; there are no hard-to-see components that must be jockeyed into critical alignment before closing.

Circuit-closing inrush currents (including fault currents) are picked up by the fault-closing contacts of the Uni-Rupter Interrupter and the fuse, not by current-carrying contacts or by interrupting contacts. See **Figure 17 on page 29**. This allows fault closing without contact destruction, preserving the operating integrity of the Uni-Rupter Interrupter.

FIGURE 14. Live switching with Uni-Rupter Interrupter.

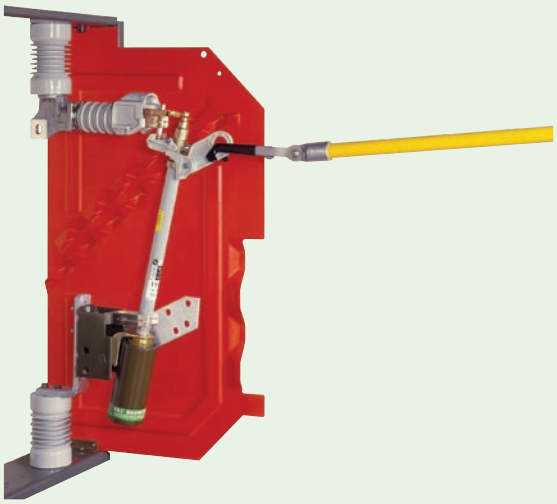

1 The Grappler Handling Tool is the S&C fuse-handling fitting supplied with each unit equipped for fuses.

FIGURE 15. Removing (or installing) a fuse from the mounting using the Grappler tool.

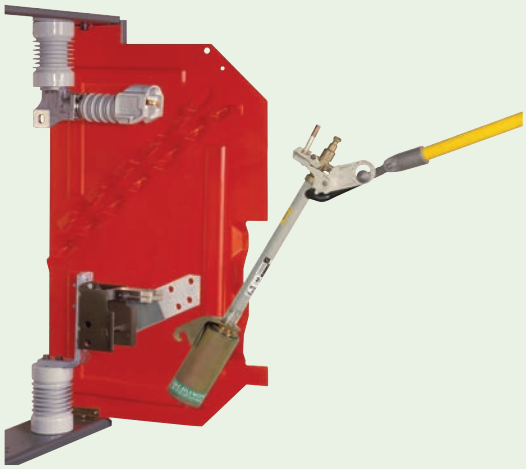

FIGURE 16. Circuit-closing with a Uni-Rupter Interrupter.

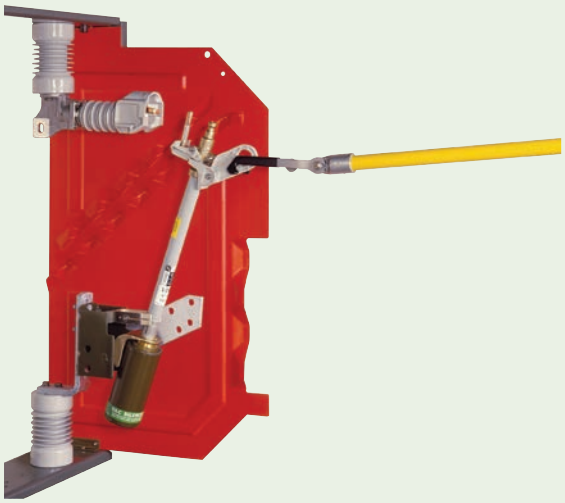

Switching with the Uni-Rupter Interrupter

S&C Type SML Power Fuses and Fault Fiter Electronic Power Fuses with the Uni-Rupter Interrupter are suitable for the following single-pole live-switching duties in single-phase or three-phase circuits of distribution systems rated 14.4 kV or 25 kV:

LIVE SWITCHING—OPENING

- **Transformer switching**—Transformer load currents up through 200 or 400 amperes at 14.4 kV and 200 amperes at 25 kV, as well as transformer magnetizing currents associated with the applicable loads
- **Line switching**—Load splitting (parallel or loop switching) and load dropping of currents up through 200 or 400 amperes at 14.4 kV and 200 amperes at 25 kV; also line dropping (charging currents typical for distribution systems of these voltage ratings)
- **Cable switching**—Load splitting (parallel or loop switching) and load dropping of currents up through 200 or 400 amperes at 14.4 kV and 200 amperes at 25 kV; also cable dropping (charging currents typical for distribution systems of these voltage ratings)

LIVE SWITCHING – CLOSING

- **Circuit-closing**—Inrush currents associated with the above opening duties
- **Duty-cycle fault closing**—A one-time fault-closing capability equal to the interrupting rating of the fuse (in amperes RMS asymmetrical: 22,400 for the SML-20, 20,000 for the SML-4Z, and 22,400 for Fault Fiter fuses at 14.4 kV, 20,000 for each fuse at 25 kV), and a two-time fault-closing capability of 13,000 amperes RMS asymmetrical at 14.4 kV or 25 kV (These values represent the fault-closing capabilities of the fuse with the Uni-Rupter Interrupter when the fuse is closed with a purposeful thrust without hesitation. See **Figure 17 on page 29**. Following the specified number of such closings (one or two), the Uni-Rupter Interrupter will remain operable and able to carry and interrupt rated current.)

FIGURE 17. Fault-closing and current-carrying contacts of the Uni-Rupter Interrupter and fuse.

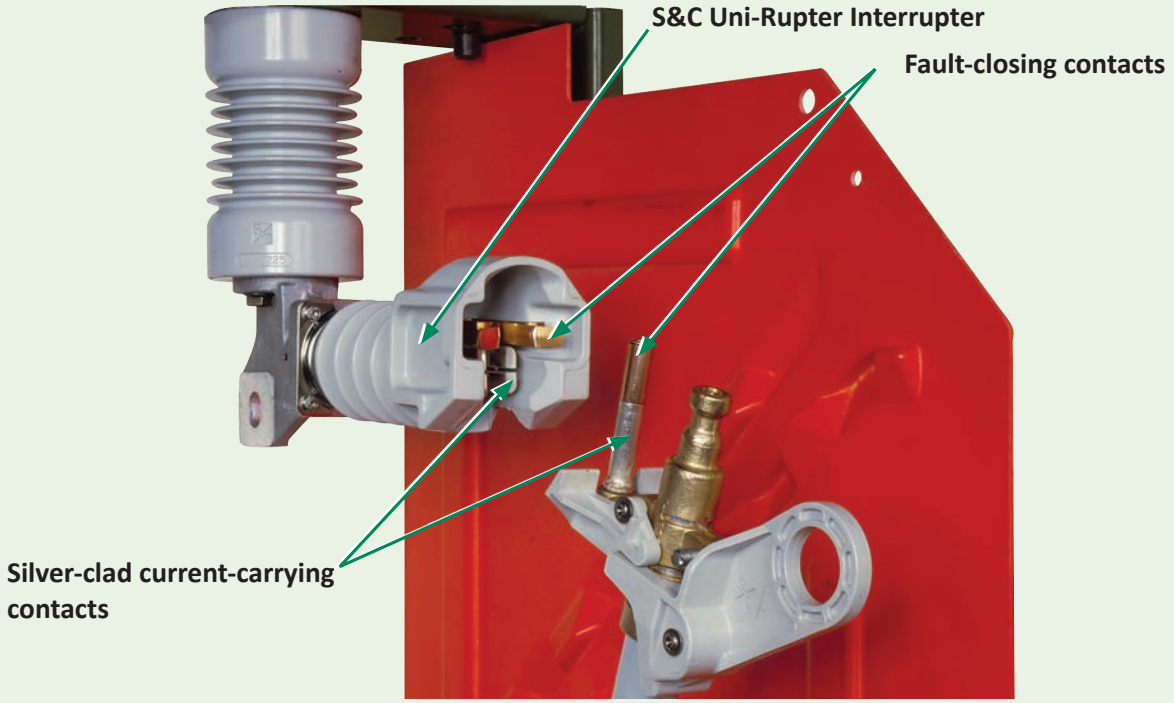

FIGURE 18. One of the two switch compartments in a Model PMH-9.

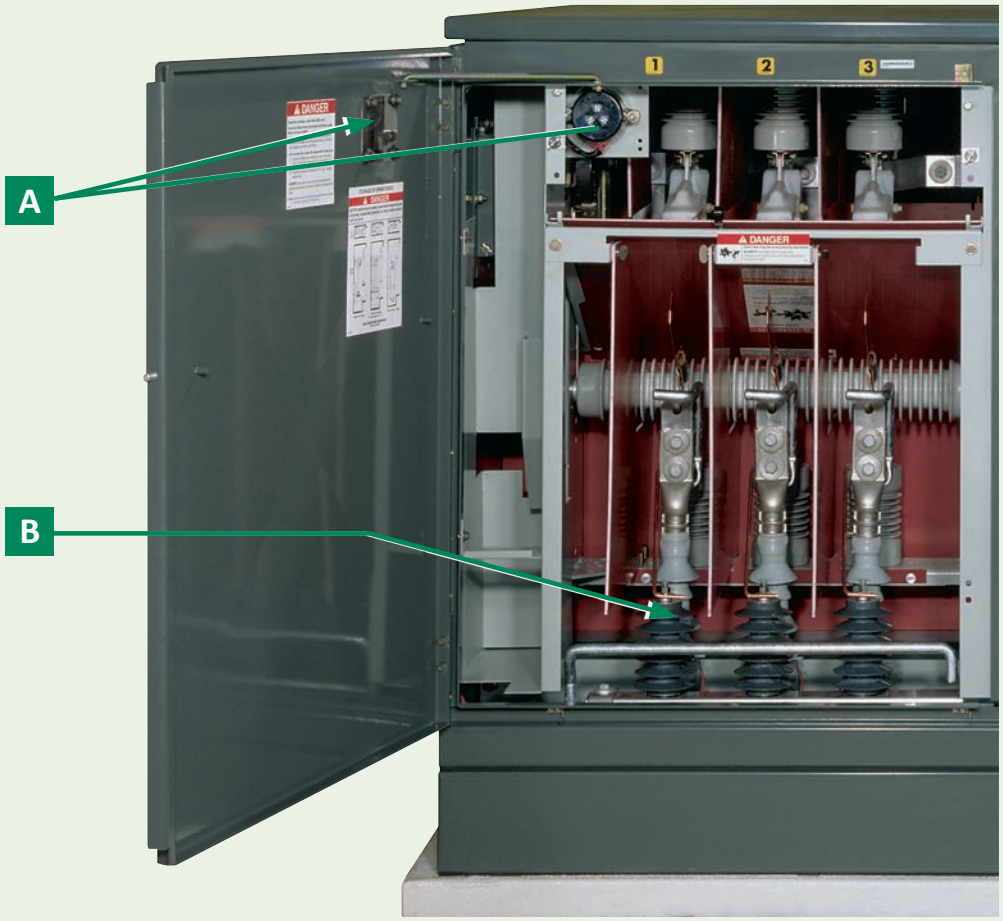

A **Mounting provisions for the fault indicator with a viewing window in the door** (optional in switch compartments) accommodate one three-phase indicator with single-phase sensors (fault indicator shown for illustrative purposes only).

B **Surge arresters** (optional) are available in 9-kV through 18-kV ratings for application at source-side switch terminals. Arresters are grounded through a low-impedance bus. Mounting provisions only for surge arresters (also optional) contribute to flexibility in field tailoring each model to the application.

FIGURE 19. Optional cable guides assist in cable training and provide additional protection against damage from excessive cable or foundation movement.

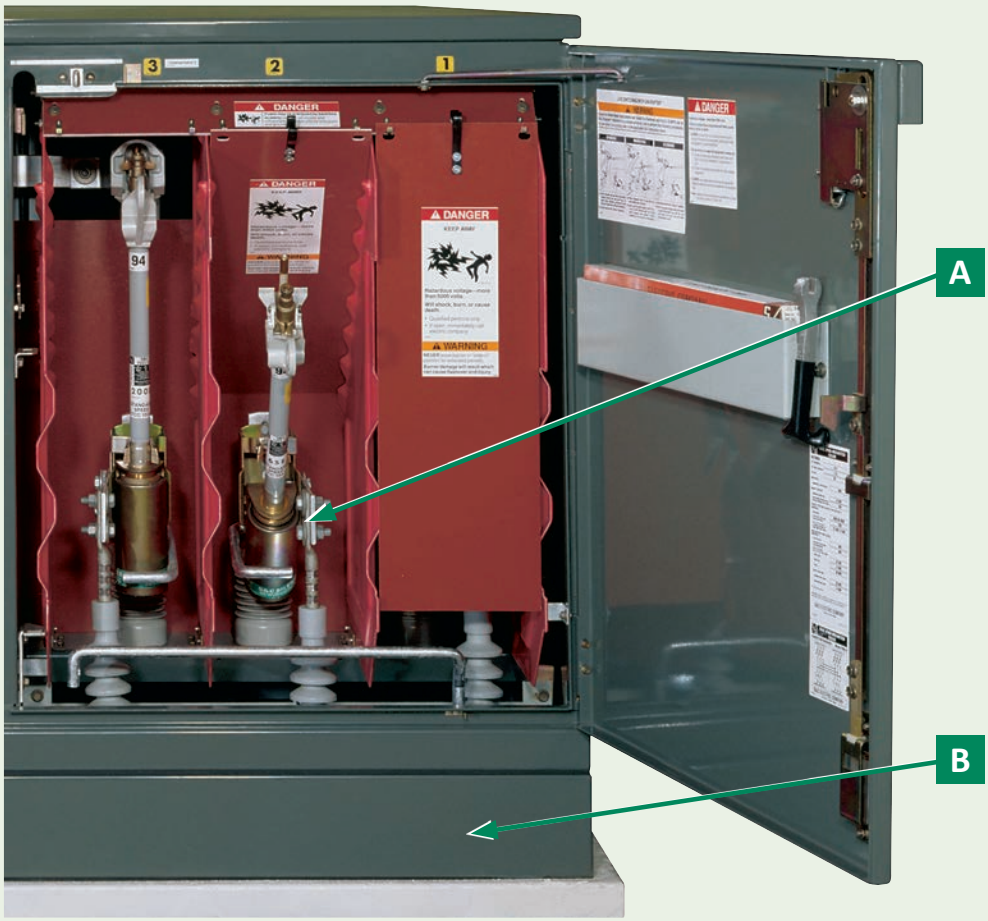

A **Accommodates up to 4/0 at all fuse terminals—up to 1000 kc mil cable at all switch and cable-termination terminals.** All terminals accept a wide variety of field-assembled cable-terminating devices, including low-cost preformed stress cones and multiskirt modular terminators. No expensive bushings or elbows are required. Adapters (optional) can be added at all switch and bus terminals to accommodate two connectors per terminal.

B **Base Spacer** (optional) increases elevation of the gear to provide additional cable training space or additional distance above the ground.

FIGURE 20. Inner barrier panels (optional for all doors providing access to medium voltage) when bolted in place by the recessed pentahead bolts, prevent inadvertent contact with live parts. These panels meet the REA's requirements for "dead-front."

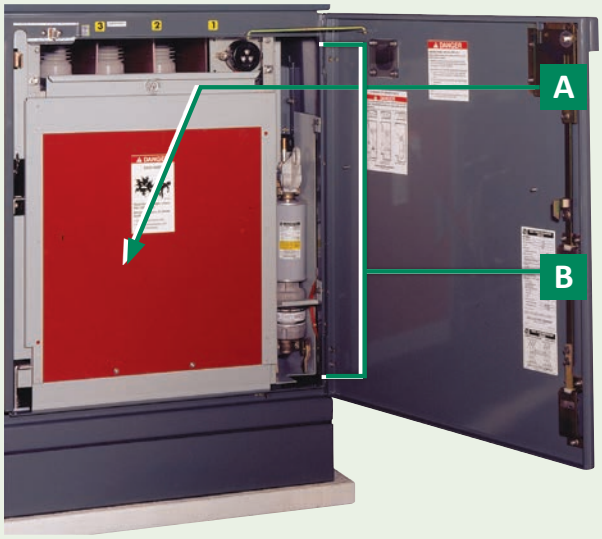

A **Inner barrier panel** (arrangement for switch compartment is shown)

B **Fuse-storage feature** (optional in switch compartments) accommodates up to three spare SML-4Z Fuse Holders, three SMU-20 Fuse Units with spare fittings, three spare Fault Fiter interrupting modules, or one spare Fault Fiter fuse holder.

FIGURE 21. Optional cable guides assist in cable training and provide additional protection against damage from excessive cable or foundation movement.

Conclusion

Specify S&C Pad-Mounted Gear for the no-compromise performance and classic quality needed for your underground distribution applications.

Whether the application is simply switching and protection of an individual transformer or a complex scheme requiring sectionalizing and/or multiple tapping of a primary feeder to serve transformers or laterals, S&C gear does it all. Select from a wide choice of models to meet the requirements of your three-phase or single-phase industrial, commercial, institutional, or residential installations—the application possibilities are virtually unlimited.

Appendix

FIGURE NOTES

Figure 1 notes

PMH 3 has two compartments and protects three loads. Compartment 1 shows three gang-operated loadbreak switches connected by a bus to cable terminations in compartment 2.

PMH 4 has two compartments. Compartment 1 shows three fuses connected by a bus to cable terminations in compartment 2.

PMH 5 has two compartments. Compartment 1 shows three gang-operated loadbreak switches connected by a bus to three fuses and cable terminations in compartment 2.

PMH 6 has four compartments. Compartments 1 and 2 each show three gang-operated loadbreak switches, both connected by a bus to three fuses and cable terminations in compartment 3. Compartment 4 is empty.

PMH 7 has four compartments. Compartment 1 shows three gang-operated loadbreak switches, connected by a bus to three fuses and cable terminations in each of compartments 3 and 4. Compartment 2 is empty.

PMH 8 has four compartments. Compartment 1 shows three gang-operated loadbreak switches and compartment 2 shows cable terminations only. Both are connected by a bus to three fuses and cable terminations in each of compartments 3 and 4.

PMH-9 has four compartments. Compartments 1 and 2 each show three gang-operated loadbreak switches, both connected by a bus to three fuses and cable terminations in each of compartments 3 and 4. See **Figure 18 on page 30**

PMH 10 has four compartments. All four compartments show three gang-operated switches, and each compartment is connected by a common bus.

PMH 11 has four compartments. Compartments 1, 2, and 4 each show three gang-operated loadbreak switches, connected by a bus to three fuses and cable terminations in compartment 3.

PMH 12 has four compartments. Compartment 2 shows three gang-operated loadbreak switches connected by a bus to three fuses and cable terminations in each of compartments 1, 3, and 4.

PMH 13 has four compartments. Compartments 1, 2, and 4 each show three gang-operated switches, and compartment 3 shows cable terminations only. Each compartment is connected by a common bus.

PMH-19 has four compartments. Compartments 1 and 2 show three gang-operated loadbreak switches connected by bus to a tie switch in compartment 4. This tie switch is then connected by bus to three fuses and cable terminations in compartment 3.

Figure 7 notes

A line diagram demonstrating simple circuit arrangements combined into a complex distribution system serving many loads of different types.

A complex looped-primary circuit consisting of a single-phase subloop and three 3-phase subloops.

7a: A Model PMH-9 serving both ends of the single-phase subloop.

7b: A Model PMH-9 serving both ends of a 3-phase subloop.

7c: A 3-phase subloop consisting of three Model PMH 9's and two Model PMH-6's. On one side of the main looped-primary circuit is one of those Model PMH-6's and on the other side is one of the Model PMH-9's.

7d: A 3-phase subloop consisting of a Model PMH-9 and Model PMH-6, connecting to three fused transformers. One of the transformers is a normally open point.

7e: A model PMH-11 serving one isolated 3-phase load and a tie to another system.

7f: A 3-phase subloop with a normally open point. This 3-phase subloop consists of two Model PMH-9's and one Model PMH-6

CONTACT YOUR S&C SALES REPRESENTATIVE FOR MORE INFORMATION

sandc.com

662-30 *112723*

© S&C Electric Company 1989-2023, all rights reserved